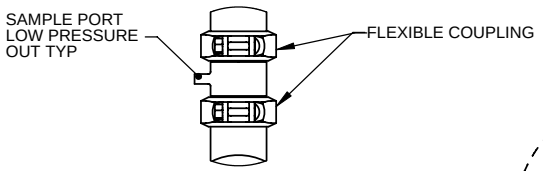

DETAIL A
SCALE 1 : 6

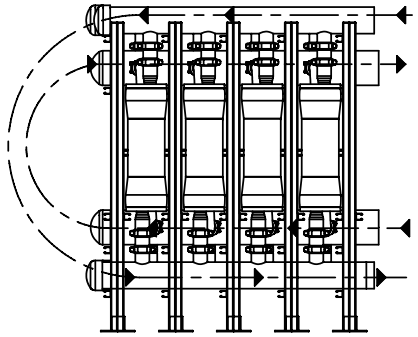

'U' FLOW CONFIGURATION

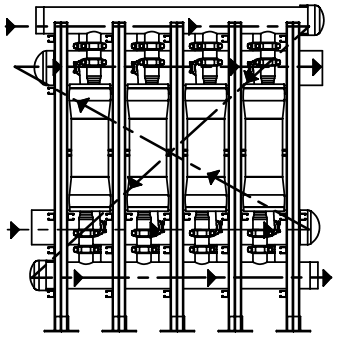

'Z' FLOW CONFIGURATION

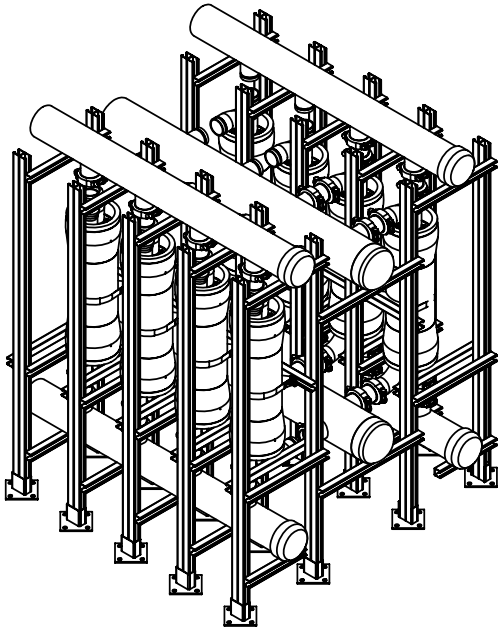

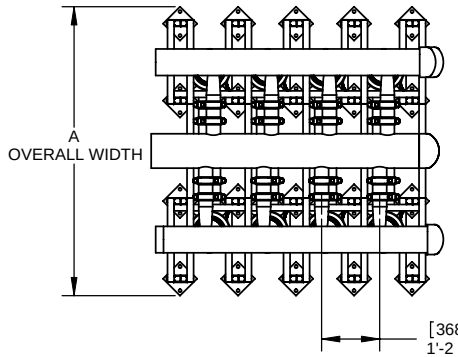

8 PX CONFIGURATION SHOWN

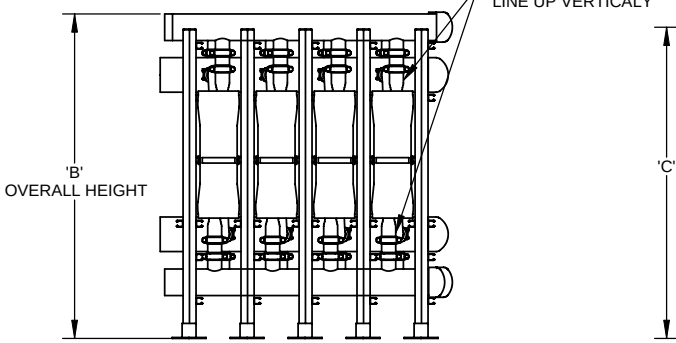

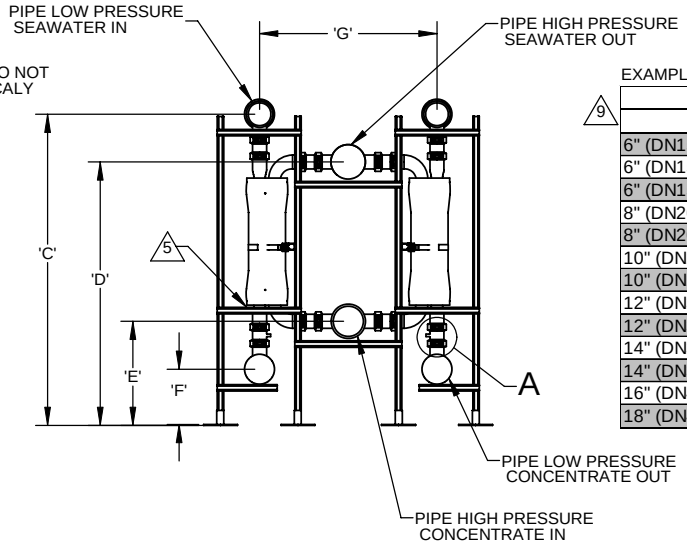

EXAMPLE CONFIGURATIONS

9

LP & HP PIPE DIA	LENGTH (mm)						
	A(mm)	B(mm)	C(mm)	D(mm)	E(mm)	F(mm)	G(mm)
6" (DN150) LP & 6" (DN150) HP	1748	2014	1939	1659	647	338	1061
6" (DN150) LP & 8" (DN200) HP	1798	2014	1939	1684	672	338	1111
6" (DN150) LP & 10" (DN250) HP	1848	2014	1939	1709	697	338	1161
8" (DN200) LP & 10" (DN250) HP	1848	2114	2014	1709	697	363	1161
8" (DN200) LP & 12" (DN300) HP	1898	2114	2014	1734	722	363	1211
10" (DN250) LP & 14" (DN350) HP	1948	2214	2089	1759	747	388	1261
10" (DN250)LP & 16" (DN400) HP	1998	2214	2089	1784	772	388	1311
12" (DN300) LP & 16" (DN400) HP	1998	2314	2164	1784	772	413	1311
12" (DN300) LP & 18" (DN450) HP	2048	2314	2164	1809	797	413	1361
14" (DN350) LP & 18" (DN450) HP	2048	2414	2239	1809	797	438	1361
14" (DN350) LP & 20" (DN500) HP	2098	2414	2239	1834	822	438	1411
16" (DN400) LP & 20" (DN500) HP	2098	2514	2314	1834	822	463	1411
18" (DN450) LP & 22" (DN550) HP	2248	2614	2389	1859	847	488	1511

NOTES:
1. ENERGY RECOVERY INC. PRESSURE EXCHANGER DEVICE PRICES DO NOT INCLUDE ANY PIPING COMPONENTS, MANIFOLDS, RACKS, OR CONNECTION FITTINGS.
2. CUSTOMER TO VERIFY AND PROVIDE MANIFOLD PIPING AND RACKING IN ACCORDANCE WITH ENERGY RECOVERY INC. SPECIFICATIONS AND THER OWN PROCESS.
3. ENERGY RECOVERY RESERVES TO RIGHT TO MAKE SPECIFICATION OR DIMENSION CHANGES WITHOUT NOTICE.
4. REFER TO ERI DRAWING #: 40009 FOR PX DEVICE UNIT DIMENSIONS

5 SUPPORT PX DEVICE BY HOUSING. USE SHIMS UNDER ALL PX DEVICES. ADJUST THICKNESS ACCORDINGLY.
6. MAXIMUM HIGH AND LOW PRESSURE MANIFOLD INLET VELOCITIES ARE 12.0 ft/s (3.7 m/s) FOR 'U' CONFIGURATION AND 7.0 ft/s (2.1 m/s) FOR 'Z' CONFIGURATION. HIGH PRESSURE FLOW CONFIGURATION IS INDEPENDENT OF LOW PRESSURE FLOW CONFIGURATION. SEE DESIGN OF PX DEVICE ARRAYS IN ERI DOCUMENT #80074-01
7. PX DEVICE ORIENTATION CAN BE AS SHOWN OR INVERTED.
8. A 'T' FLOW MANIFOLD IS CONSIDERED TO BE TWO 'U' FLOW MANIFOLDS FACE TO FACE.

9 CALCULATE MINIMUM PIPE DIAMETER BASED ON INLET FLOW AND THE MAXIMUM FLOW VELOCITY FOR THE FLOW CONFIGURATION USED.

[METRIC]
INCH

REV.	ECN NO.	DESCRIPTION	BY	DATE
3	08-012	ADDED NOTE 9 AND UPDATED DIMENTIONS IN TABLE	FTM	3/19/2008
2	--	CORRECTED PX ORIENTATION	FTM	1/23/2008
1	--	ADDED U AND Z CONFIGURATION ILLUSTRATIONS AND NOTE ON FLOW VELOCITIES AND PX ORIENTATION	FTM	12/18/2007

REVISIONS

UNLESS OTHERWISE SPECIFIED:
TOLERANCES: (IN INCHES)
FRACTIONAL: ± 1/32"
ANGULAR: MACH ±.5° BEND ±1°
TWO PLACE DECIMAL: ±.01"
THREE PLACE DECIMAL: ±.005"
FOUR PLACE DECIMAL: ±.0002"
SURFACE FINISH:
ON PART 125 RMS
ON O-RING SURFACES 32 RMS
DIMENSIONING AND TOLERANCING PER ANSI Y14.5M (LATEST)
FINISH:
MATERIAL: N/A

ENERGY RECOVERY INC.
1908 Doolittle Drive, San Leandro, CA 94577
Ph. (510)483-7370 / Fax: (510)483-7371
www.energyrecovery.com

DRAWN	FTM	08/4/06
CHECKED		
ENG APPR.		

THIRD ANGLE PROJECTION

TITLE: GENERAL CELL ARRAY, 65 SERIES

SIZE C | DWG. NO. 60008 | REV 3

SCALE: 1:14 | WEIGHT: | SHEET 1 OF 1

FOR CONCEPT ONLY

PROPRIETARY AND CONFIDENTIAL
THE INFORMATION CONTAINED IN THIS DRAWING IS THE SOLE PROPERTY OF ENERGY RECOVERY INC. ANY REPRODUCTION IN PART OR AS A WHOLE WITHOUT THE WRITTEN PERMISSION OF ENERGY RECOVERY INC. IS PROHIBITED.

INFORMATION
DRAWING STATUS

© **2008 , ENERGY RECOVERY, INC.**

Thursday, March 20, 2008 11:27:21 AM-- \\Eri-svr2\eng-fileserver\Engineering\Freddie\My PDMWorks Workgroup Documents\60008